Early Journal Content on JSTOR, Free to Anyone in the World

This article is one of nearly 500,000 scholarly works digitized and made freely available to everyone in the world by JSTOR.

Known as the Early Journal Content, this set of works include research articles, news, letters, and other writings published in more than 200 of the oldest leading academic journals. The works date from the mid-seventeenth to the early twentieth centuries.

We encourage people to read and share the Early Journal Content openly and to tell others that this resource exists. People may post this content online or redistribute in any way for non-commercial purposes.

Read more about Early Journal Content at http://about.jstor.org/participate-jstor/individuals/early-journal-content.

JSTOR is a digital library of academic journals, books, and primary source objects. JSTOR helps people discover, use, and build upon a wide range of content through a powerful research and teaching platform, and preserves this content for future generations. JSTOR is part of ITHAKA, a not-for-profit organization that also includes Ithaka S+R and Portico. For more information about JSTOR, please contact support@jstor.org.

PHILOSOPHICAL TRANSACTIONS.

I. *On the fire-damp of coal mines, and on methods of lighting the mines so as to prevent its explosion.* *By Sir* H. Davy, *LL. D. F. R. S. V. P. R. I.*

Read November 9, 1815.

THE accidents arising from the explosion of the fire-damp or inflammable gas of coal mines, mixed with atmospherical air, are annually becoming more frequent and more destructive in the collieries in the North of England.

A committee has been for some time formed at Sunderland for the benevolent purpose of investigating the causes of these accidents, and of searching for means of preventing them. In consequence of an invitation from the Rev. Dr. GRAY, one of the most active members of this committee, I was induced to turn my attention to the subject. I went to the North of England, and visited some of the principal collieries in the neighbourhood of Newcastle, for the purpose of ascertaining the condition of the workings, and the state of their ventilation. I found the greatest desire to assist my enquiries in the gentlemen acquainted with the northern collieries, as well as in the inspectors or viewers of the mines;

and I have particular obligations on this point to the Rev. Dr. GRAY, CUTHBERT ELLISON, Esq. M. P., the Rev. JOHN HODGSON, Mr. BUDDLE, and Mr. DUNN. Dr. FENWICK, Dr. CLANNY, and Mr. FENWICK, likewise kindly offered me their assistance.

From the information which I collected on the spot, increased by the perusal of a report of Mr. BUDDLE on the state of the mines, I was convinced that, as far as ventilation was concerned, the resources of modern science had been fully employed; and that a mode of preventing accidents was only to be sought for, in a method of lighting the mines free from danger, and which, by indicating the state of the air in the part of the mine where inflammable air was disengaged, so as to render the atmosphere explosive, should oblige the miners to retire till the workings were properly cleared.

An account of an ingenious apparatus for burning a candle supplied with atmospherical air by a bellows through water, has been published in the Philosophical Transactions, by Dr. CLANNY; but I believe this apparatus has not yet been used in any of the collieries.

The common means employed for lighting those parts of the mine where danger is apprehended from the fire-damp, is by a steel wheel, which, being made to revolve in contact with flint, affords a succession of sparks: but this apparatus always requires a person to work it; and, though much less liable to explode the fire-damp than a common candle, yet it is said to be not entirely free from danger.

Mr. BUDDLE having obligingly shown to me the degree of light required for working the collieries, I made several ex-

periments, with the hope of producing such a degree of light, without active inflammation; I tried KUNCKEL'S, CANTON'S, and BALDWIN'S phosphorus, and likewise the electrical light in close vessels, but without success; and even had these degrees of light been sufficient, the processes for obtaining them, I found, would be too complicated and difficult for the miners.

The fire-damp has been shown by Dr. HENRY, in a very ingenious paper published in the nineteenth volume of Nicholson's Journal, to be light carburetted hydrogene gas, and Dr. THOMSON has made some experiments upon it; but the degree of its combustibility, as compared with that of other inflammable gases, has not, I believe, been examined, nor have many different specimens of it been analysed; and it appeared to me, that some minute chemical experiments on its properties ought to be the preliminary steps to enquiries respecting methods of preventing its explosion. I therefore procured various specimens of the fire-damp in its purest state, and made a number of experiments upon it. And in examining its relations to combustion I was so fortunate as to discover some properties belonging to it, which appear to lead to very simple methods of lighting the mines, without danger to the miners, and which, I hope, will supply the desideratum so long anxiously required by humanity. I shall in the following pages have the honour of describing these properties, and the methods founded upon them, to the Royal Society, and I shall conclude with some general observations.

The fire-damp is produced in small quantities in coal mines, during the common process of working.

The Rev. Mr. HODGSON informed me, that on pounding some common Newcastle coal fresh from the mine in a cask furnished with a small aperture, the gas from the aperture was inflammable. And on breaking some large lumps of coal under water, I ascertained that they gave off inflammable gas.* Gas is likewise disengaged from bituminous shist, when it is worked.

The great sources of the fire-damp in mines are, however, what are called blowers, or fissures in the broken strata, near dykes, from which currents of fire-damp issue in considerable quantity, and sometimes for a long course of years.† When old workings are broken into, likewise, they are often found filled with fire-damp; and the deeper the mine the more common in general is this substance.

* This is probably owing to the coal strata having been formed under a pressure greater than that of the atmosphere, so that they give off elastic fluid when they are exposed to the free atmosphere: and probably coals containing animal remains, evolve not only the fire-damp, but likewise azote and carbonic acid, as in the instance of the gas sent by Dr. CLANNY.

In the Apennines, near Pietra Mala, I examined a fire produced by gaseous matter, constantly disengaged from a shist stratum: and from the results of the combustion, I have no doubt but that it was pure fire-damp. Mr. M. FARADAY, who accompanied me, and assisted me in my chemical experiments, in my journey, collected some gas from a cavity in the earth about a mile from Pietra Mala, then filled with water, and which, from the quantity of gas disengaged, is called Aqua Buja. I analysed it in the Grand Duke's laboratory at Florence, and found that it was pure light hydro-carbonate, requiring two volumes of oxygene for its combustion, and producing a volume of carbonic acid gas.

It is very probable, that these gases are disengaged from coal strata beneath the surface, or from bituminous shist above coal; and at some future period new sources of riches may be opened to Tuscany from this invaluable mineral treasure, the use of which in this country has supplied such extraordinary resources to industry.

† Sir JAMES LOWTHER found a uniform current produced in one of his mines for two years and nine months. Phil. Trans. Vol. XXXVIII. p. 112.

I have analysed several specimens of the fire-damp in the laboratory of the Royal Institution; the pure inflammable part was the same in all of them, but it was sometimes mixed with small quantities of atmospherical air, and in some instances with azote and carbonic acid.

Of 6 specimens collected by Mr. DUNN from a blower in the Hepburn Colliery, by emptying bottles of water close to it, the purest contained $\frac{1}{15}$ only of atmospherical air, with no other contamination, and the most impure contained $\frac{5}{12}$ of atmospherical air; so that this air was probably derived from the circumambient air of the mine. The weight of the purest specimen was for 100 cubical inches 19.5 grains.

One measure of it required for its complete combustion by the electric spark nearly 2 measures of oxygene, and they formed nearly 1 measure of carbonic acid.

Sulphur heated strongly, and repeatedly sublimed in a portion of it freed from oxygene by phosphorus, produced a considerable enlargement of its volume, sulphuretted hydrogene was formed, and charcoal precipitated; and it was found that the volume of the sulphuretted hydrogene produced, when it was absorbed by solution of potassa, was exactly double that of the fire-damp decomposed.

It did not act upon chlorine in the cold; but, when an electric spark was passed through a mixture of 1 part of it with 2 of chlorine, there was an explosion, with a diminution to less than $\frac{1}{4}$, and much charcoal was deposited.

The analysis of specimens of gas sent to my friend JOHN GEORGE CHILDREN, Esq. by Dr. CLANNY, afforded me similar results; but they contained variable quantities of carbonic acid gas and azote.

Different specimens of these gases were tried by the test of exposure to chlorine both in darkness and light: they exhibited no marks of the presence of olefiant gas or hydrogene; and the residuum produced by detonation with chlorine showed them to be free from carbonic oxide.

It is evident, then, that the opinion formed by other chemists respecting the fire damp is perfectly correct; and that it is the same substance as the inflammable gas of marshes, the exact chemical nature of which was first demonstrated by Mr. DALTON; and that it consists, according to my view of definite proportions, of 4 proportions of hydrogene in weight 4, and 1 proportion of charcoal in weight 11.5.

I made several experiments on the combustibility and explosive nature of the fire-damp. When 1 part of fire-damp was mixed with 1 of air, they burnt by the approach of a lighted taper, but did not explode; 2 of air and 3 of air to 1 of gas produced similar results. When 4 of air and 1 of gas were exposed to a lighted candle, the mixture being in the quantity of 6 or 7 cubical inches in a narrow necked bottle, a flame descended through the mixture, but there was no noise: 1 part of gas inflamed with 6 parts of air in a similar bottle, produced a slight whistling sound: 1 part of gas with 8 parts of air, rather a louder sound: 1 part with 10, 11, 12, 13 and 14 parts, still inflamed, but the violence of combustion diminished. In 1 part of gas and 15 parts of air, the candle burnt without explosion with a greatly enlarged flame; and the effect of enlarging the flame, but in a gradually diminishing ratio, was produced as far as 30 parts of air to 1 of gas.

The mixture which seemed to possess the greatest explo-

sive power, was that of 7 or 8 parts of air to 1 of gas; but the report produced by 50 cubical inches of this mixture was less than that produced by $\frac{8}{10}$ of the quantity of a mixture of 2 parts of atmospherical air and 1 of hydrogene.

It was very important to ascertain the degree of heat required to explode the fire-damp mixed with its proper proportion of air.

I found that a common electrical spark would not explode 5 parts of air and 1 of fire-damp, though it exploded 6 parts of air and 1 of damp: but very strong sparks from the discharge of a Leyden jar, seemed to have the same power of exploding different mixtures of the gas as the flame of the taper. Well burned charcoal, ignited to the strongest red heat, did not explode any mixture of air and of the fire-damp; and a fire made of well burned charcoal, i. e. charcoal that burned without flame, was blown up to whiteness by an explosive mixture containing the fire-damp, without producing its inflammation. An iron rod at the highest degree of red heat, and at the common degree of white heat, did not inflame explosive mixtures of the fire-damp; but, when in brilliant combustion, it produced the effect.

The flame of gaseous oxide of carbon as well as of olefiant gas exploded the mixtures of the fire-damp.

In respect of combustibility, then, the fire-damp differs most materially from the other common inflammable gases. Olefiant gas, which I have found explodes mixed in the same proportion with air, is fired by both charcoal and iron heated to dull redness. Gaseous oxide of carbon, which explodes when mixed with 2 parts of air, is likewise inflammable by red hot iron and charcoal. And hydrogene, which explodes when mixed with $\frac{3}{7}$ of its volume of air, takes fire at the lowest

visible heat of iron and charcoal; and the case is the same with sulphuretted hydrogene.

I endeavoured to ascertain the degree of expansion of mixtures of fire-damp and air during their explosion, and likewise their power of communicating flame through apertures to other explosive mixtures.

I found that when 6 of air and 1 of fire-damp were exploded over water by a strong electrical spark, the explosion was not very strong, and, at the moment of the greatest expansion, the volume of the gas did not appear to be increased more than $\frac{1}{2}$.

In exploding a mixture of 1 part of gas from the distillation of coal, and 8 parts of air in a tube of a quarter of an inch in diameter and a foot long, more than a second was required before the flame reached from one end of the tube to the other; and I could not make any mixture explode in a glass tube $\frac{1}{7}$ of an inch in diameter: and this gas was more inflammable than the fire-damp, as it consisted of carburetted hydrogene gas mixed with some olefiant gas.

In exploding mixtures of fire-damp and air in a jar connected with the atmosphere by an aperture of half an inch, and connected with a bladder by a stopcock, having an aperture of about $\frac{1}{6}$ of an inch,* I found that the flame passed into the atmosphere, but did not communicate through the stopcock, so as to inflame the mixture in the bladder: and in comparing the power of tubes of metal and those of glass, it appeared that the flame passed more readily through glass tubes of the same diameter; and that explosions were stopped

* Since these experiments were made, Dr. WOLLASTON has informed me, that he and Mr. TENNANT had observed some time ago, that mixtures of the gas from the distillation of coal and air, would not explode in very small tubes.

by metallic tubes of $\frac{1}{5}$ of an inch,* when they were $1\frac{1}{2}$ inch long; and this phenomenon probably depends upon the heat lost during the explosion in contact with so great a cooling surface, which brings the temperature of the first portions exploded below that required for the firing of the other portions. Metal is a better conductor of heat than glass: and it has been already shown that the fire-damp requires a very strong heat for its inflammation.

Mixture of the gas with air I found, likewise, would not explode in metallic canals or troughs, when their diameter was less than the $\frac{1}{7}$ of an inch, and their depth considerable in proportion to their diameter; nor could explosions be made to pass through such canals.

Explosions likewise I found would not pass through very fine wire sieves or wire gauze.

I mixed azote and carbonic acid in different quantities with explosive mixtures of fire-damp, and I found that even in very small proportions they diminished the velocity of the inflammation. Azote, when mixed in the proportion of 1 to 6 of an explosive mixture, containing 12 of air and 1 of fire-damp, deprived it of its power of explosion; when 1 part of azote was mixed with 7 of an explosive mixture, only a feeble blue flame slowly passed through the mixture.

1 part of carbonic acid to 7 of an explosive mixture deprived it of the power of exploding; so that its effects are more remarkable than those of azote; probably, in consequence of its greater capacity for heat, and probably, likewise,

* I do not give this result as perfectly exact, as the bore of the metallic tube had not the same polish as that of the tube of glass.

of a higher conducting power connected with its greater density.

The consideration of these various facts, led me to adopt a form of a lamp, in which the flame, by being supplied with only a limited quantity of air, should produce such a quantity of azote and carbonic acid, as to prevent the explosion of the fire-damp, and which, by the nature of its apertures for giving admittance and exit to the air, should be rendered incapable of communicating any explosion to the external air.

If in a close lantern, supplied with a small aperture below and another above, a lighted lamp having a very small wick be placed, the natural flame gradually diminishes, till it arrives at a point at which the supply of air is sufficient for the combustion of a certain small quantity of oil; if a lighted taper be introduced into the lantern through a small door in the side, which is instantly closed, both lights will burn for a few seconds, and be extinguished together.

A similar phenomenon occurs, if, in a close lantern, supplied with a quantity of air merely sufficient to support a certain flame, a mixture of fire-damp and air is gradually admitted, the first effect of the fire-damp is to produce a larger flame round that of the lamp, and this flame, consuming the oxygene which ought to be supplied to the flame of the lamp, and the standard of the power of the air to support flame being lowered by the admixture of fire-damp and by its rarefaction, both the flame of the fire-damp and that of the taper are extinguished together; and as the air contained a certain quantity of azote and carbonic acid before the admission of the fire-damp, their effect, by mixing with it, is such as to prevent an explosion in any part of the lantern.

I tried several experiments on the burning of a flame in atmospheres containing fire-damp. I inclosed a taper in a little close lantern, having a small aperture below and a larger one above, of such size that the taper burnt with a flame a little below its natural size. I placed this lantern, the taper being lighted, on a stand under a large glass receiver standing in water, having a curved tube containing a little water, adapted to its top to confine the air, and which was of such a capacity as to enable the candle to burn for some minutes; I then rapidly threw a quantity of fire-damp into the receiver from a bladder, so as to make the atmosphere in it explosive. As the fire-damp mixed with the air, the flame of the taper gradually enlarged, till it half filled the lantern; it then rapidly diminished, and was suddenly extinguished without the slightest explosion. I examined the air of the receiver after the experiment, and found it highly explosive.

I tried similar experiments, throwing in mixtures of air and fire-damp, some containing the maximum, and others the minimum of fire-damp necessary for explosion, and always with the same satisfactory results. The flame considerably increased, and was soon extinguished.

I introduced a lighted lantern to which air was supplied by two glass tubes of $\frac{1}{10}$ of an inch in diameter and half an inch long, into a large jar containing an explosive mixture of 1 part of fire-damp and 10 parts of air; the taper burnt at first with a feeble light, the flame soon became enlarged, and was then extinguished. I repeated these experiments several times, and with a perfect constancy of result.

It is evident, then, that to prevent explosions in coal mines,

it is only necessary to use air-tight lanterns, supplied with air from tubes or canals of small diameter, or from apertures covered with wire gauze placed below the flame, through which explosions cannot be communicated, and having a chimney at the upper part, on a similar system for carrying off the foul air; and common lanterns may be easily adapted to the purpose, by being made air-tight in the door and sides, by being furnished with the chimney, and the system of safety apertures below and above.

The principle being known, it is easy to adopt, and multiply practical applications of it.

The first safe lantern that I had constructed, was made of tin-plate, and the light emitted through four glass plates in the sides. The air was admitted round the bottom of the flame from a number of metallic tubes of $\frac{1}{8}$ of an inch in diameter, and an inch and $\frac{1}{2}$ long. The chimney was composed of two open cones, having a common base perforated with many small apertures, and fastened to the top of the lantern, which was made tight in a pneumatic rim containing a little oil; the upper and lower apertures in the chimney were about $\frac{1}{3}$ of an inch: the lamp, which was fed with oil, gave a steady flame of about an inch high and half an inch in diameter. When the lantern was slowly moved, the lamp continued to burn, but more feebly, and when it was rapidly moved, it went out. To obviate this circumstance, I surrounded the bottom of the lantern with a perforated rim; and this arrangement perfectly answered the end proposed.

I had another chimney fitted to this lantern, furnished with a number of safety tin-plate tubes of the sixth of an inch in diameter and two inches long: but they diminished consi-

derably the size of the flame, and rendered it more liable to go out by motion; and the following experiments appear to show, that if the diameter of the upper orifice of the chimney be not very large, it is scarcely possible that any explosion produced by the flame can reach it.

I threw into the safe lantern with the common chimney, a mixture of 15 parts of air and 1 of fire-damp: the flame was immediately greatly enlarged, and the flame of the wick seemed to be lost in the larger flame of the fire-damp. I placed a lighted taper above the orifice of the chimney: it was immediately extinguished, but without the slightest previous increase of its flame, and even the wick instantly lost its fire by being plunged into the chimney.

I introduced a lighted taper into a close vessel containing 15 parts of air and 1 of gas from the distillation of coal, suffered it to burn out in the vessel, and then analyzed the gas. After the carbonic acid was separated, it appeared by the test of nitrous gas to contain nearly $\frac{1}{3}$ of of its original quantity of oxygene; but detonation with a mixture of equal parts of hydrogene and oxygene proved that it contained no sensible quantity of carburetted hydrogene gas.

It is evident, then, that when in the safe lantern, the air gradually becomes contaminated with fire-damp, this fire-damp will be consumed in the body of the lantern; and that the air passing through the chimney, cannot contain any inflammable mixture.

I made a direct experiment on this point. I gradually threw an explosive mixture of fire-damp and air into the safe lantern from a bladder furnished with a tube which opened by a large aperture above the flame; the flame became enlarged, and

by a rapid jet of gas I produced an explosion in the body of the lantern; there was not even a current of air through the safety tubes at the moment, and the flame did not appear to reach above the lower aperture of the chimney; and the explosion merely threw out from it a gust of foul air.

The second safety lantern that I have had made is upon the same principle as the first, except that instead of tubes, *safety canals* are used, which consist of close concentric hollow metallic cylinders of different diameters, and placed together so as to form circular canals of the diameter of from $\frac{1}{25}$ to $\frac{1}{40}$ of an inch, and an inch and $\frac{7}{10}$ long, by which air is admitted in much larger quantities than by the small tubes. In this arrangement there is so free a circulation of air, that the chimney likewise may be furnished with safety canals.

I have had lamps made for this kind of lantern which stand on the outside, and which may be supplied with oil and cotton without any necessity of opening the lantern; and in this case the chimney is soldered to the top, and the lamp is screwed into the bottom, and the wick rises above the air canals.

I have likewise had glass lamps with a single wick, and argand lamps made on the same principle, the chimney being of glass covered with a metallic top containing the safety canals, and the air entering close to the flame through the circular canals.

The third kind of safe lamp or lantern, and which is by far the most simple, is a close lamp or lantern into which the air is admitted, and from which it passes, through apertures covered with *brass wire gauze* of $\frac{1}{200}$ of an inch in thickness, the apertures of which should not be more than $\frac{1}{120}$ of an

inch; this stops explosions as well as long tubes or canals, and yet admits of a free draught of air.

Having succeeded in the construction of safe lanterns and lamps, equally portable with common lanterns and lamps, which afforded sufficient light, and which bore motion perfectly well, I submitted them individually to practical tests, by throwing into them explosive atmospheres of fire-damp and air. By the natural action of the flame drawing air through the air canals, from the explosive atmosphere, the light was uniformly extinguished; and when an explosive mixture was forcibly pressed into the body of the lamp, the explosion was always stopped by the safety apertures, which may be said figuratively to act as a sort of *chemical fire sieves* in separating flame from air. But I was not contented with these trials, and I submitted the safe canals, tubes, and wire gauze fire sieves, to much more severe tests: I made them the medium of communication between a large glass vessel filled with the strongest explosive mixture of carburetted hydrogene and air, and a bladder $\frac{2}{3}$ or $\frac{1}{2}$ full of the same mixture, both insulated from the atmosphere. By means of wires passing near the stop-cock of the glass vessel, I fired the explosive mixture in it by the discharge of a Leyden jar. The bladder always expanded at the moment the explosion was made; a contraction as rapidly took place; and a lambent flame played round the mouths of the safety apertures, open in the glass vessel; but the mixture in the bladder did not explode: and by pressing some of it into the glass vessel, so as to make it replace the foul air, and subjecting it to the electric spark, repeated explosions were produced, proving the perfect security of the safety apertures; even when acted

on by a much more powerful explosion than could possibly occur from the introduction of air from the mines.

These experiments held good whatever was the proportions of the explosive mixture and whatever was the size of the glass vessel, (no one was ever used containing more than a quart) provided as many as 12 metallic tubes were used of $\frac{1}{7}$ of an inch in diameter, and $2\frac{1}{2}$ inches long; or provided the circular metallic canals, were $\frac{1}{25}$ of an inch in diameter, $1.\frac{1}{7}$ of an inch deep, and at least 2 inches in circumference; or provided the wire gauze had apertures of only $\frac{1}{120}$ of an inch. When 12 metallic tubes were employed as the medium of communication, $\frac{1}{7}$ of an inch in diameter and an inch long, the explosion was communicated by them into the bladder. Four glass tubes of the $\frac{1}{16}$ of an inch in diameter and 2 inches long, did not communicate the explosion; but *one* of this diameter and length produced the effect. The explosion was stopped by a single tube $\frac{1}{28}$ * of an inch in diameter, when it was 3 inches long, but not when it was 2 inches long.

The explosion was stopped by the metallic gauze of $\frac{1}{120}$ when it was placed between the exploding vessel and the bladder, though it did not present a surface of more than half a square inch, and the explosive mixture in the bladder in passing through it to supply the vacuum produced in the glass vessel, burnt on the surface exposed to the glass vessel for some seconds, producing a murmuring noise.

A circular canal $\frac{1}{25}$ of an inch in diameter, an inch and a

* These results appear at first view contradictory to those mentioned page 9. But it must be kept in view that the first set of experiments were made in tubes open in the air, and the last in tubes exposed to the whole force of air explosion, and connected only with close vessels filled with explosive mixtures.

half in circumference, and $1\frac{7}{10}$ of an inch deep, communicated explosion, but four concentric canals, of the same depth and diameter, and of which the smallest was two inches in diameter, and separated from each other only by their sides, which were of brass, and about $\frac{1}{40}$ of an inch in thickness, did not suffer the explosion to act through them.

It would appear then, that the smaller the circumference of the canal, that is the nearer it approaches to a tube, the greater must be its depth, or the less its diameter to render it safe.

I did not perceive any difference in these experiments, when the metals of the apertures were warmed by repeated explosions; it is probable, however, that considerable elevation of temperature would increase the power of the aperture to pass the explosion; but the difference between the temperature of flame, and that marked on our common mercurial scale, is so great that the addition of a few degrees of heat probably does not diminish perceptibly the cooling power of a metallic surface, with regard to flame.

By diminishing the diameter of the air canals, their power of passing the explosion is so much diminished that their depth and circumference may be brought extremely low. I found that flame would not pass through a canal of the $\frac{1}{70}$ of an inch in diameter, when it was $\frac{1}{4}$ of an inch deep, and forming a cylinder of only $\frac{1}{4}$ of an inch in circumference; and a number of apertures of $\frac{1}{100}$ of an inch are safe when their depth is equal to their diameter. It is evident from these facts, that metallic doors, or joinings in lamps, may be easily made safe by causing them to project upon and fit closely to parallel metallic surfaces.

Longitudinal air canals of metal may, I find, be employed with the same security as circular canals; and a few pieces of tin-plate soldered together with wires to regulate the diameter of the canal, answer the purpose of the feeder or safe chimney, as well as drawn cylinders of brass.

A candle will burn in a lantern or glass tube made safe with metallic gauze, as well as in the open air; I conceive, however, that oil lamps, in which the wick will always stand at the same height, will be preferred.

But the principle applies to every kind of light, and its entire safety is demonstrated.

When the fire-damp is so mixed with the external atmosphere as to render it explosive, the light in the safe lantern or lamp will be extinguished, and warning will be given to the miners to withdraw from, and to ventilate, that part of the mine.

If it be necessary to be in a part of the mine where the fire-damp is explosive, for the purpose of clearing the workings, taking away pillars of coal, or other objects, the workmen may be lighted by a fire made of charcoal, which burns without flame, or by the steel mill, though this does not afford such entire security from danger as the charcoal fire.

It is probable, that when explosions occur from the sparks from the steel mill, the mixture of the fire-damp is in the proportion required to consume all the oxygene of the air, for it is only in about this proportion that explosive mixtures can be fired by electrical sparks from a common machine.

As the wick may be moved without communication between the air in the safe lantern or lamp and the atmosphere, there is no danger in trimming or feeding them; but they should be

lighted in a part of the mine where there is no fire-damp, and by a person charged with the care of the lights: and by these inventions, used with such simple precautions, there is every reason to believe a number of lives will be saved, and much misery prevented. Where candles are employed in the open air in the mines, life is extinguished by the explosion; with the safe lantern or safe lamp the light is only put out, and no other inconvenience will occur.

It does not appear, by what I have learnt from the miners, that breathing an atmosphere containing a certain mixture of fire-damp near or even at the explosive point, is attended with any bad consequence. I ascertained that a bird lived in a mixture of equal parts of fire-damp and air; but he soon began to show symptoms of suffering. I found a slight head ache produced by breathing for a few minutes an explosive mixture of fire-damp and air: and if merely the health of the miners be considered, the fire-damp ought always to be kept far below the point of its explosive mixture.

Miners sometimes are found alive in a mine after an explosion has taken place: this is easily explained, when it is considered that the inflammation is almost always limited to a particular spot, and that it mixes the residual air with much common air; and supposing 1 of fire-damp to 13 of air to be exploded, there will still remain nearly $\frac{1}{3}$ of the original quantity of oxygene in the residual gas: and in some experiments, made 16 years ago, I found that an animal lived, though with suffering, for a short time, in a gas containing 100 parts of azote, 14 parts of carbonic acid, and 7 parts of oxygene.

EXPLANATION OF THE PLATE.

PLATE I.

Fig. 1. Represents the safe lantern, with its air-feeder and chimney furnished with safety metallic canals. It contains about a quart of air. The sides are of horn or glass, made air tight by putty or cement. A. is the lamp through which the circular air-feeding canals pass: they are 3 concentric hollow cylinders, distant from each other $\frac{1}{26}$ of an inch: the smallest is $2\frac{1}{2}$ inches in circumference; their depth is 2 inches. B. is the chimney, containing 4 such canals, the smallest 2 inches in circumference: above it is a hollow cylinder, with a cap to prevent dust from passing into the chimney. C. is the hole for admitting oil. D. is a long canal containing a wire by which the wick is moved or trimmed. E. is the tube forming a connection between the reservoir of oil and the chamber that supplies the wick with oil. F. is the rim round the bottom of the lantern to enable it to bear motion.

Fig. 2. Is the lamp of Fig. 1., of its natural size, the references to the letters are the same.

Fig. 3. Is a common chimney which may be used in the lantern; but the safety chimney doubles security.

Fig. 4 Exhibits the safety concentric canals or fire sieves, which if $\frac{1}{25}$ of an inch in diameter, must not be less than 2 inches in exterior circumference and 1.7 inch high.

Fig. 5. Exhibits the longitudinal safe canals or fire sieves.

Fig. 6. Exhibits a safe lamp having a glass chimney covered with tin-plate, and the safety apertures in a cylinder with a covering above: the lower part is the same as in the lantern.

Fig. 7. An argand lamp of similar construction, with safe air canals without the flame, and metallic gauze apertures within.

Fig. 8. A tin-plate chimney top for the lamp, made safe by metallic gauze.

Fig. 9. A metallic gauze safe lamp. AAA. Screens of metallic gauze or *flame sieves*. BB. Wires for trimming the wick.

Fig. 10. A glass tube furnished with *flame sieves*, in which a common candle may be burnt. A A. The flame sieves. B. A little plate of metal to prevent the upper flame sieve from being acted on by the current of hot air.

The lamps burn brighter the higher the chimney.

From my experiments it appears, that a mere narrow throat and opening to the metallic part of the chimney, is sufficient to prevent explosions from passing through the lamp, supposing them possible; but with the safety canals or metallic gauze in the chimney the security is absolute.

The circular canals and the apertures covered with metallic gauze, are so much superior to tubes in practical application, that I have no doubt of their being generally used; I have therefore given no sketch of the first safe lantern I had constructed with tubes; but substituting tubes for canals it is exactly the same, as that represented Fig. 1.

APPENDIX.

1. IN the beginning of my inquiries I had another close lantern made, which may be called the fire-valve lantern. In this, the candle or lamp burns with its full quantity of air, admitted from an aperture below, till the air begins to be mixed with fire-damp; when, as the fire-damp increases the flame, a thermometrical spring at the top of the lantern, made of brass and steel, riveted together, and in a curved form, expands, moves a valve in the chimney, diminishes the circulation of air, and extinguishes the flame; but I did not pursue this invention, after I had discovered the properties of the fire-damp, on which the safe lantern is founded.

2. The safety of close lamps or lanterns may probably be likewise secured by sieves made of asbestus, or possibly even hair or silk, placed over the air apertures: but metallic gauze will be necessary above in the chimney. I have little doubt but that windows of fine metallic gauze may be used for giving light in lanterns, with perfect security; perhaps for the chimney it may be worth while to have fine silver plated wire gauze made.

3. The expansive powers of the fire-damp during its explosion, are so small as to render no precautions, with respect to the thickness of the glass or horn in the lamps or lanterns, necessary.

Fig. 1.

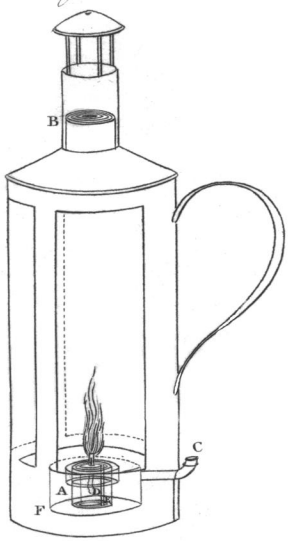

Fig. 2.

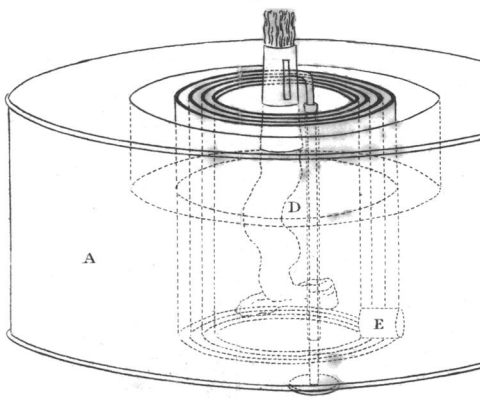

Fig. 6.

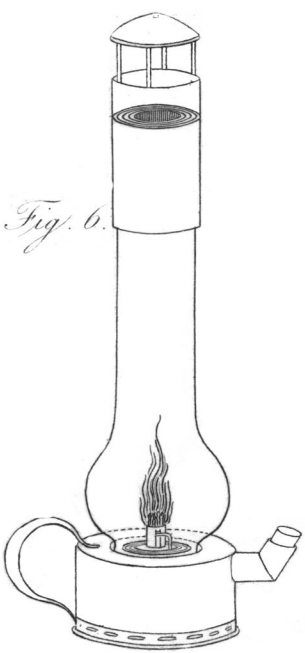

Fig. 5.

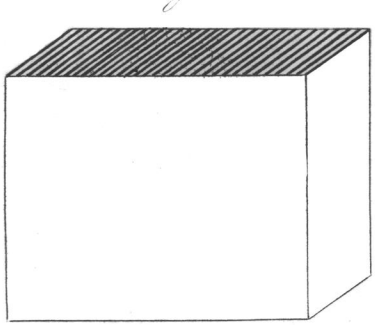

Fig. 2.

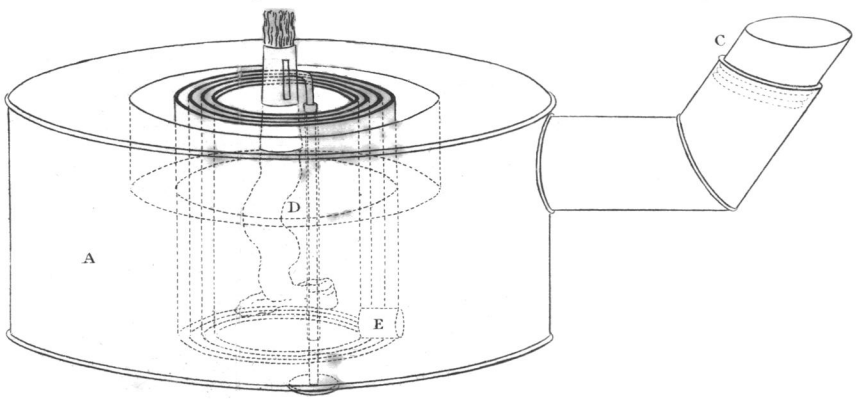

Fig. 3.

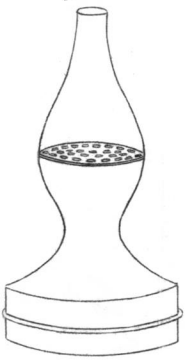

Fig. 6.

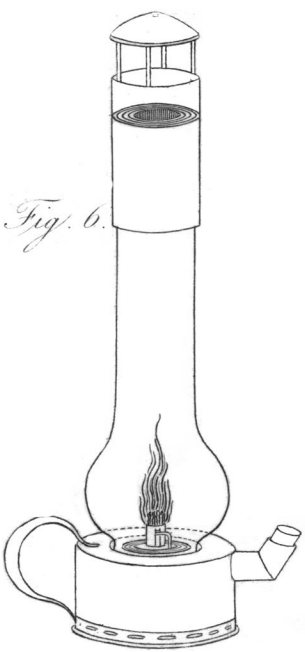

Fig. 7.

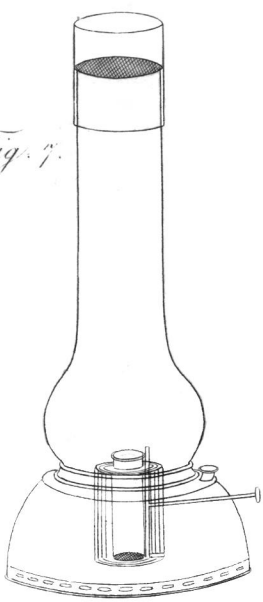

Fig. 8.

Fig. 11.

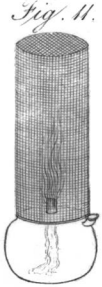

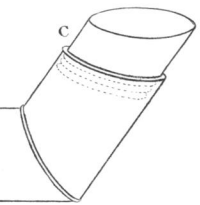

Fig. 3.

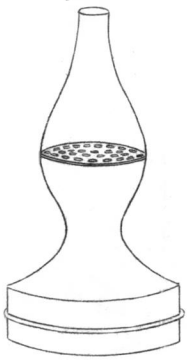

Fig. 4.

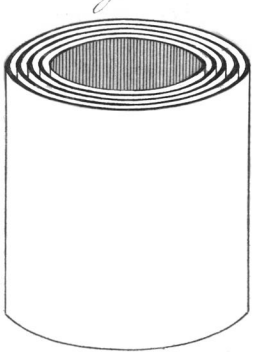

Fig. 8.

Fig. 11.

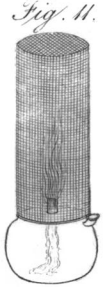

Fig. 9.

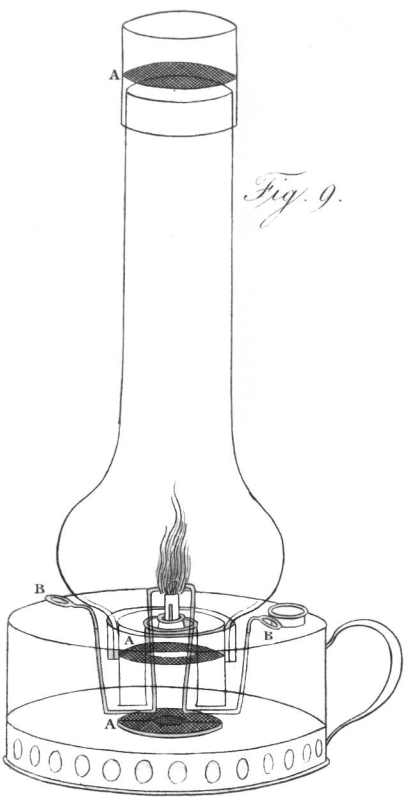

Fig. 10.

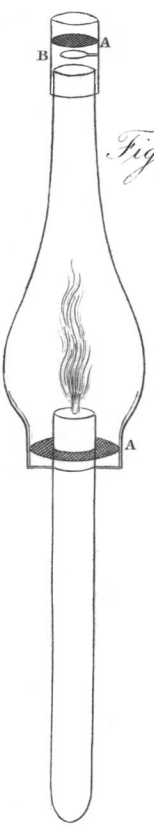

Js. Basire, sculpt.